BUILDING PERMIT PROCESS (Revised 3-31-20)

1. Applicant shall submit application to the responsible jurisdiction.

   Applicant shall include:

   a. Site plan showing property boundaries and building(s) locations. Dimensions should show distance from building to all property lines.

   b. Legal description and address of property.

   c. Two sets of plans which include footing, foundation, wall & roof details. CMS will release permit after energy calculations, makeup and combustion air calculations (mechanical calculations) and energy compliance certificate are approved. All buildings other than one and two family dwellings require architectural and/or structural engineering certifications.

   d. On-site and well information if building is not municipal water and/or sanitary sewer.

2. Building permit review and issuance normally takes 10 to 14 working days.

3. Applicant pays all fees when he/she picks up the permit(s) before construction.

4. The owner/builder is responsible for arranging or calling for all inspections. In the typical new home the following inspections would be required:

   a. Footing/foundation. This is made prior the concrete being poured.

   b. Poured foundation walls

   c. **Back Fill and Water Proofing**

   d. Plumbing Rough-in – below ground

   e. **Radon – Before any foam is placed**

   f. Mechanical Rough-in – heat/vent – in-floor & underground heat

   g. Framing – Truss specifications to be on site.

   h. Plumbing Rough-in - above ground

   i. Heat & Ventilation Rough-in

   j. Fireplace Rough-in. This inspection is made prior to enclosing unit.

   k. Insulation

   l. Finals – building, plumbing, mechanical (heat/ventilation & gas lines)

5. Certificate of Occupancy shall be issued upon completion of all approved work.

GENERAL INFORMATION:

- All structures except storage buildings 200 sq. ft. or less require a building permit. Storage buildings 200 sq. ft. or less must still comply with all applicable zoning regulations.

- Fences not over seven feet (7') high do not require a building permit.

- Permit fees are based on valuation established from State of Minnesota data sheets.

- Electrical permits and electrical inspections must be arranged through the Minnesota state electrical inspector.

- All building and plumbing contractors must be licensed through the State of Minnesota and their license number must be included on all permit applications.

- The plumbing plans for all commercial/industrial projects must be approved by the Minnesota State Health Department. Inspections are made by the Health Department, however, they often defer these to the local building inspector. A copy of the state approval shall be on file at CMS prior to scheduling plumbing inspections.

- The Minnesota State Building Code adopted under Minnesota Statutes, Section 326B.106, subdivision 1, includes the following chapters:
  A. 1300 – Minnesota Building Code Administration;
  B. 1301 - Building Official Certification;
  C. 1302 - State Building Code Construction Approvals;
  D. 1303 - Special Provisions;
  E. 1305 – Minnesota Building Code;
  F. 1306 - Special Fire Protection Systems;
  G. 1307 – Elevators and Related Devices ;
  H. 1309 - Minnesota Residential Code;
  I. 1311 – MN Conservation Code for Existing Buildings;
  J. 1315 - Minnesota Electrical Code;
  K. 1325 - Solar Energy Systems;
  L. 1335 - Floodproofing Regulations;
  M. 1341 - Minnesota Accessibility Code;
  N. 1346 - Minnesota Mechanical Code;
  O. 1350 - Manufactured Homes;
  P. 1360 - Prefabricated Structures;
  Q. 1361 – Industrialized/Modular Buildings ;
  R. 1370 - Storm Shelters (Manufactured Home Parks);
  S. 4714 - Minnesota Plumbing Code;
  T. 1322 and 1323 - Minnesota Energy Codes;
  U. 5230 – Minnesota High Pressure Piping Systems

CALL FOR ALL INSPECTIONS
CONSTRUCTION MANAGEMENT SERVICES
507-282-8206 - 800-940-2547

Date Received: _____ Date Paid/Picked-up _____ Permit # _____

APPLICATION FOR BUILDING PERMIT
CITY OF KASSON, MINNESOTA

Applicant: _____ Phone No: _____

Address: _____ Proposed Project: _____

Contractor: _____ Phone No: _____

State License No: _____ Plumber's Name/License # _____

Building Site Location/New Address: _____

TYPE OF CONSTRUCTION

__ New __ Single Family __ Multi-Family __ Addition/Alteration __ Deck __ Demolition

__ Move __Sign __ Plumbing __ Mechanical __Pool __ Commercial/Industrial

Proposed Project: _____ Currently Zoned: _____

Legal Description of Property: _____

Size of Lot or Parcel: _____ Water Service Line Size: _____

Building Size: _____ (sq. ft.) Total sq. ft. of all accessory buildings & hard surface (driveway, etc.): _____

SET BACKS: Front Property Line _____ ft. Rear Property Line ____ ft. Side Line ____ ft. Side Line ____ ft.

Year House was built: _____ If pre-1978 – list name of qualifying contractor or company with certification for lead abatement. _____(MN Statute 144.9501-144)(Remodel Only)

UTILITIES REQUIRED: _____ SEWER _____ WATER _____ ELECTRIC

A SKETCH DRAWN TO SCALE SHOWING ALL DIMENSIONS AND DISTANCES FROM LOT LINES MUST BE ATTACHED ALONG WITH TWO (2) COPIES OF PLANS.

I hereby declare that I am the Owner, or authorized agent of the owner of the above described property and I agree to construct the building or use herein described in accordance with the regulations and ordinances that govern said improvement within the City of Kasson and that the foregoing information contained on this permit is a true and correct statement of my intentions.

Signed by Applicant: _____

Date: _____ Please Print Name: _____

==========

(TO BE COMPLETED BY CITY) **VALUATION: $**_____

Building Permit Fee: $_____ Plan Check Fee: $_____ Surcharge: $_____

BUILDING PERMIT APPROVED BY: _____ DATE: _____

Water Connect Fee: $_____ Water Tap Fee: $_____ Water Meter Fee: $_____

Sewer Connect Fee: $_____ Sewer Tap Fee: $_____ Sump Pump Fee: $_____

Electric Meter Fee: $_____ Curb Top Fee: $_____ Other Fees: $_____

Electric Connect Fee:$_____ Plumbing: $_____ Mechanical: $_____

ZONING APPROVED BY: _____ DATE: _____

Building Permit Fees: $_____ Zoning Fees: $_____ **Total Amount Due: $**_____

Zoning District: _____ Setbacks: Front _____ Rear _____ R. Side _____ L. Side _____

BUILDING PERMIT APPLICANT: PROPERTY OWNER

I, _____(print name) understand that the State of Minnesota requires that all residential building contractors, remodelers and roofers obtain a state license unless they qualify for a specific exemption from the licensing requirements. This license requirement applies to owners of residential real estate who build or improve such property for purposes of speculation or resale.

By signing this document, I attest to the fact that I am improving this house for my own use and am not building or improving this house for the purpose of reselling it. I hereby claim to be exempt from the state licensing requirements because I am not in the business of building or remodeling on speculation or for resale and that the house for which I am applying for this permit, located at_____ is the first residential structure I have built or improved in the past 24 months. I also acknowledge that because I do not have a state license, I forfeit any mechanic's lien rights to which I may otherwise have been entitled under Minn. Stat. §514.01.

Furthermore, I acknowledge that I may be hiring independent contractors to perform certain aspects of the construction or improvement of this house and I understand that some of these contractors may be required to be licensed by the State of Minnesota. I understand that unlicensed residential contracting, remodeling, and/or roofing activity is a misdemeanor under Minn. Stat. §326B.082, subd.16 and can also result in a fine of up to $10,000. I further state that I understand that the filing of a false statement with the City of Kasson may also result in criminal prosecution and/or civil penalties pursuant to applicable city/township ordinances and/or state statutes.

I have also been informed and acknowledge that by listing myself as the contractor for this project, I alone will be responsible to the City of Kasson for compliance with all applicable building codes and city/township ordinances in connection with the work being performed on this property.

_____
Name (signature)

_____
Date

For questions or information on contractor licensing, or to check the licensing status and enforcement history of a particular contractor, call the Minnesota Department of Labor and Industry, Construction Codes and Licensing Division, at (651) 284-5069. The Web site is: www.doli.state.mn.us/contractor

ATTACHED GARAGE DETAIL

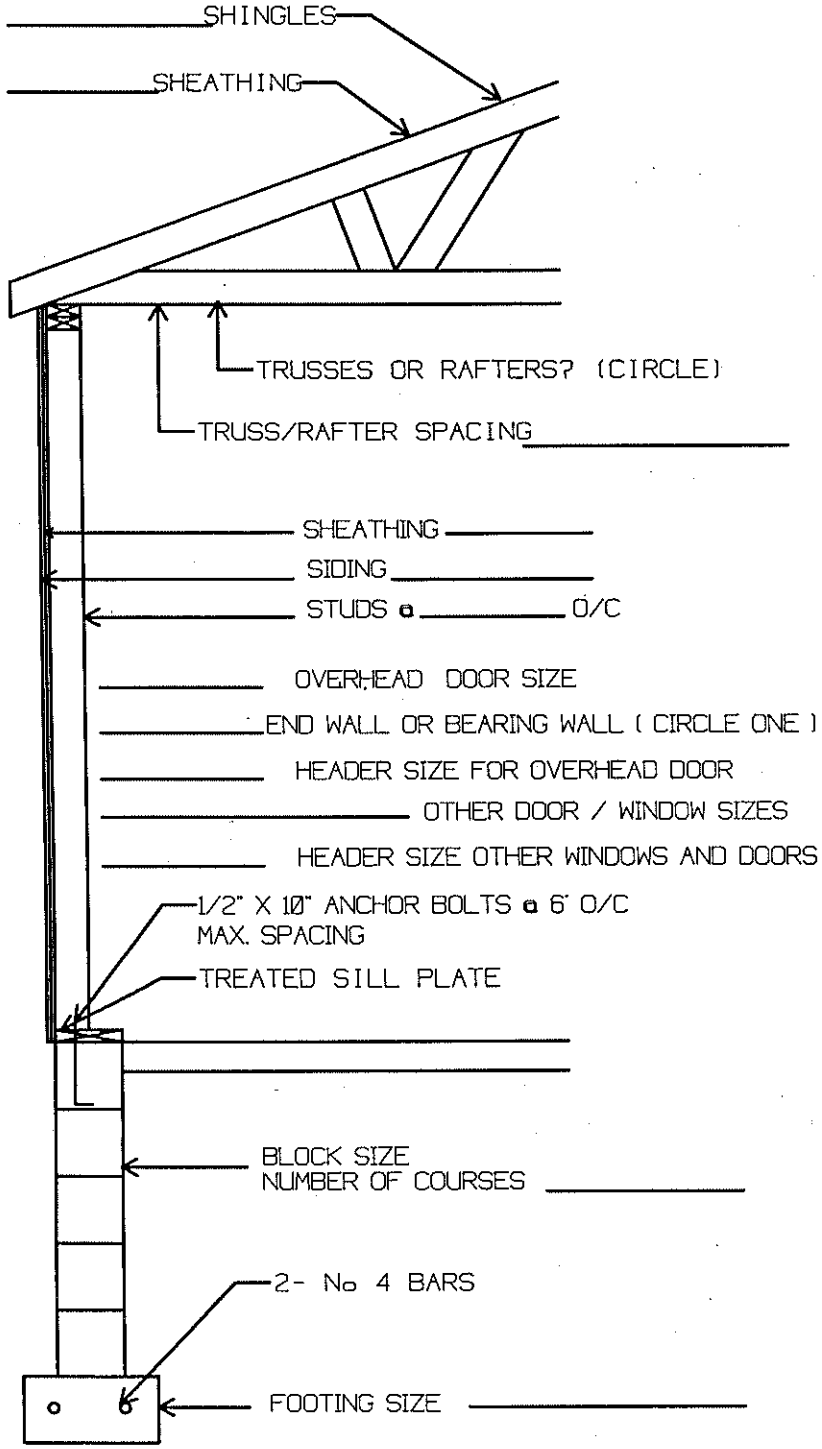

GARAGE FLOOR PLAN

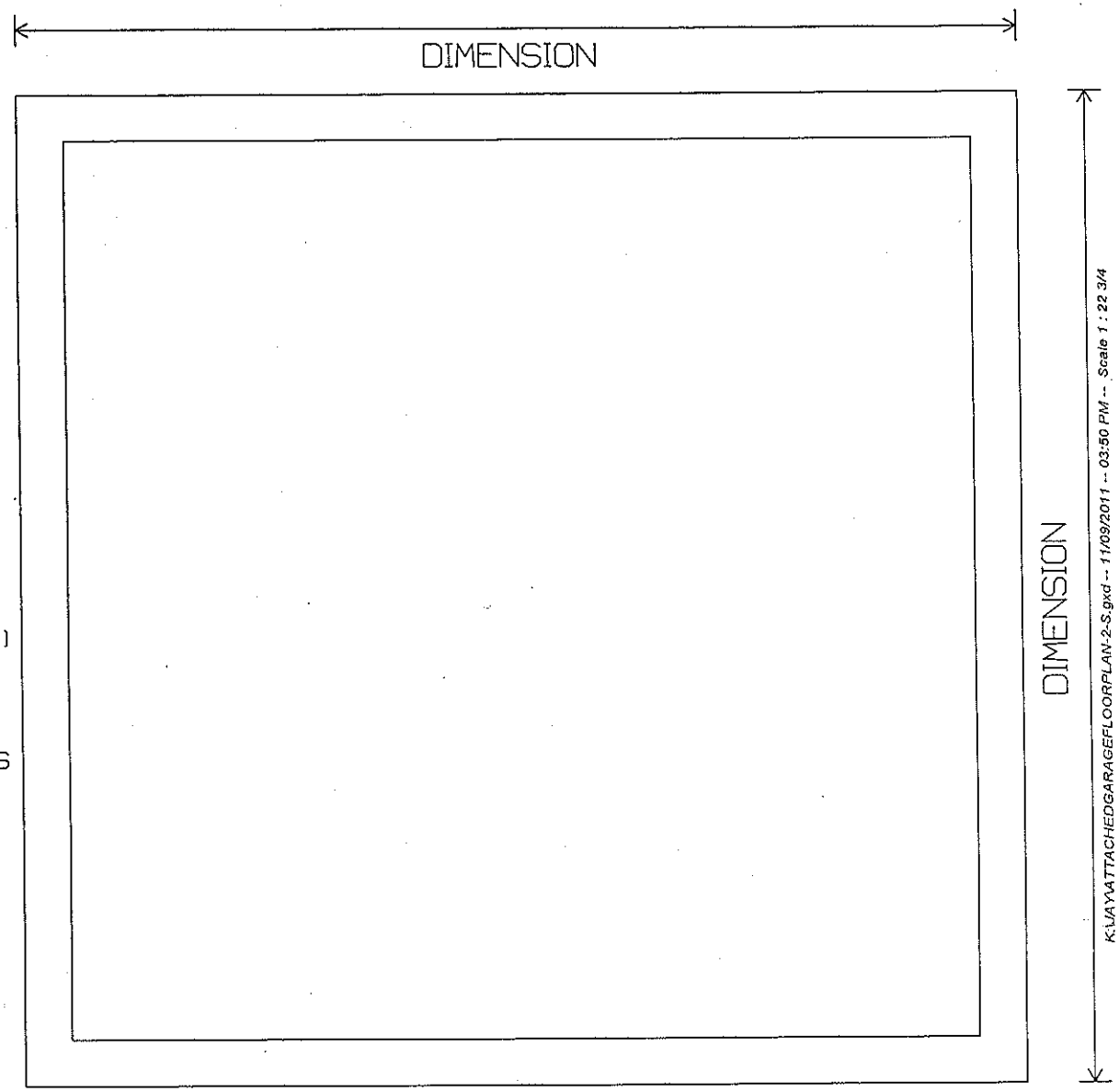

DRAW IN ALL WINDOW AND DOOR LOCATIONS
WITH SIZES AND HEADER SIZES

SHOW DIRECTION OF RAFTERS OR TRUSSES

SEE BACK FOR SAMPLE DRAWING

K:\AYATTACHEDGARAGEFLOORPLAN-2-S.gxd -- 11/09/2011 -- 03:50 PM -- Scale 1 : 22 3/4

General building code requirements

The 2007 Minnesota State Building Code adopts the 2006 International Residential Code (2006 IRC). All "R" code references provided in this brochure pertain to the 2006 IRC.

a. Footings must extend to frost depth for all attached garages. A "floating slab" may be used for the foundation support of detached garages on all soils except peat and muck. The slab perimeter must be sized and/or reinforced to carry all design loads. The minimum-slab thickness must be 3 1/2 inches and reinforcing is recommended. The minimum concrete strength required is 3500-pounds-per-square-inch for floating slab. Protect concrete from freezing until cured.

b. Anchor bolts or straps: Foundation plates must be anchored to the foundation with not less than 1/2 inch diameter steel bolts, or approved straps, embedded at least seven inches into the concrete and spaced not more than six feet apart. There must be a minimum of two bolts for each piece of sill plate with one bolt located within 12 inches of each end of each piece of sill plate. Anchor straps must be installed according to manufacturer's specifications.

c. Sill plate: All foundation sill plates must be approved pressure-preservative-treated wood, heartwood of redwood, black locust or cedar.

d. Wall framing: Studs must be placed with their wide dimension perpendicular to the wall and not less than three studs must be installed at each corner of an exterior wall. Minimum stud size is two inches by four inches and spaced not more than 24 inches on center.

The following samples show the minimum detail expected on site, floor and elevation plans to ensure the permit process proceeds smoothly. Additional information, such as sectional drawing or elevations, may be required. The plans should include the following information:

1. Proposed size of garage.
2. Location and size of door and window opening.
3. Size of headers over all doors and window openings.
4. Size, spacing and direction of rafter (roof) materials.
5. Type (grade and specie) of lumber to be used.
6. Braced wall panels per R602.10.

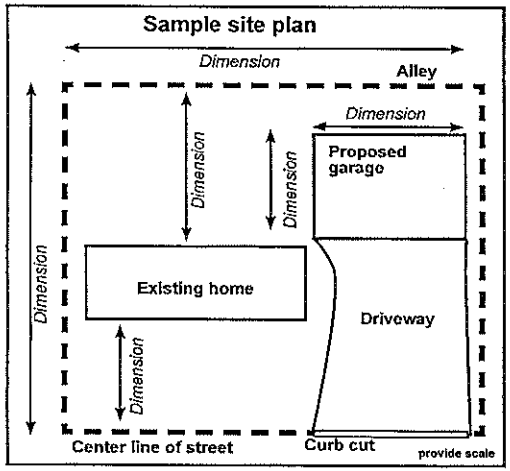

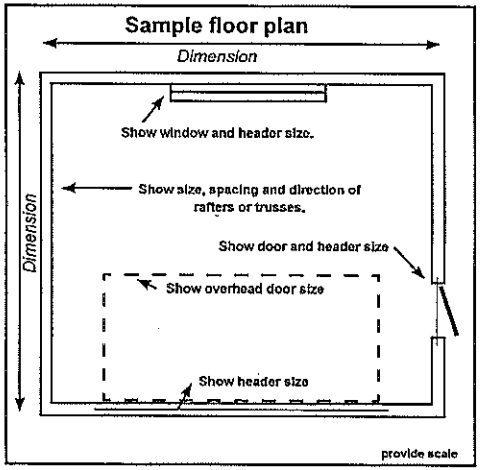

e. Top plate: Bearing and exterior wall studs need to be capped with double-top plates installed to provide overlapping at corners and at intersections with other partitions. End joints in double-top plates must be offset at least 24 inches.

f. Sheathing, roofing and siding: Approved wall sheathing, siding, roof sheathing and roof covering must be installed according to the manufacturer's specifications. Wall sheathing may be required to have a weather-resistive barrier installed over the product prior to application of the siding product.

g. Wood and earth separation: Wood used in construction located nearer than 6 inches to earth shall be treated wood.

h. Roof framing: Size and spacing of conventional lumber used for roof framing depends upon the roof pitch, span, the type of material being used and the loading characteristics being imposed. Garages must be designed for the appropriate snow load in your area. Contact your local building inspector. A snow load map is online at www.dli.mn.gov/ccld/pdf/bc_map_frost_depth.pdf.

Rafters need to be framed directly opposite each other at the ridge. A ridge board at least one inch (nominal) thickness and not less in depth than the cut end of the rafter is required for hand-framed roofs. At all valleys and hips, there also needs to be a single valley or hip rafter not less than two inches (nominal) thickness and not less in depth than the cut of the rafter. Valley needs to be designed as a beam.

Rafters must be nailed to the adjacent ceiling joist to form a continuous tie between exterior walls when the joists are parallel to the rafters. Where not parallel, rafters must be tied by a minimum one inch by four inch (nominal) cross tie spaced a maximum four foot on center. Manufactured trusses are to be installed per the manufacturer.

i. Separation required: An attached garage shall be separated from the residence and its attic area by not less than 1/2-inch (12.7 mm) gypsum board applied on the garage side. Where the separation is a floor-ceiling assembly, the structure supporting the separation shall be protected by not less than 5/8-inch (15.9 mm) type "X" gypsum board or equivalent.

j. Concrete curb block: Concrete masonry curb blocks shall be at least 6-inch-modular width (4-inch-curb blocks are not permitted by code).

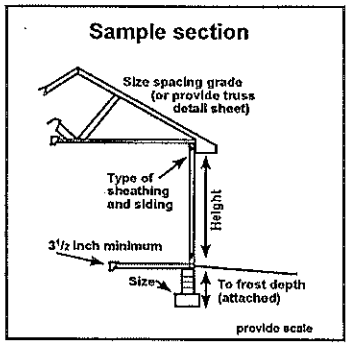

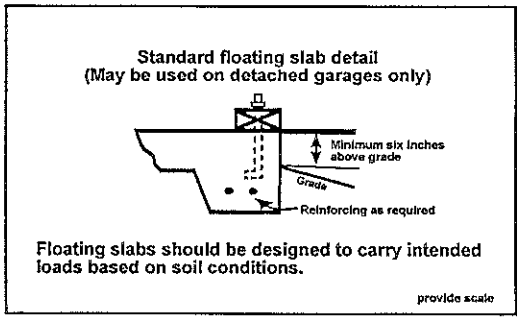

DETACHED GARAGE DETAIL

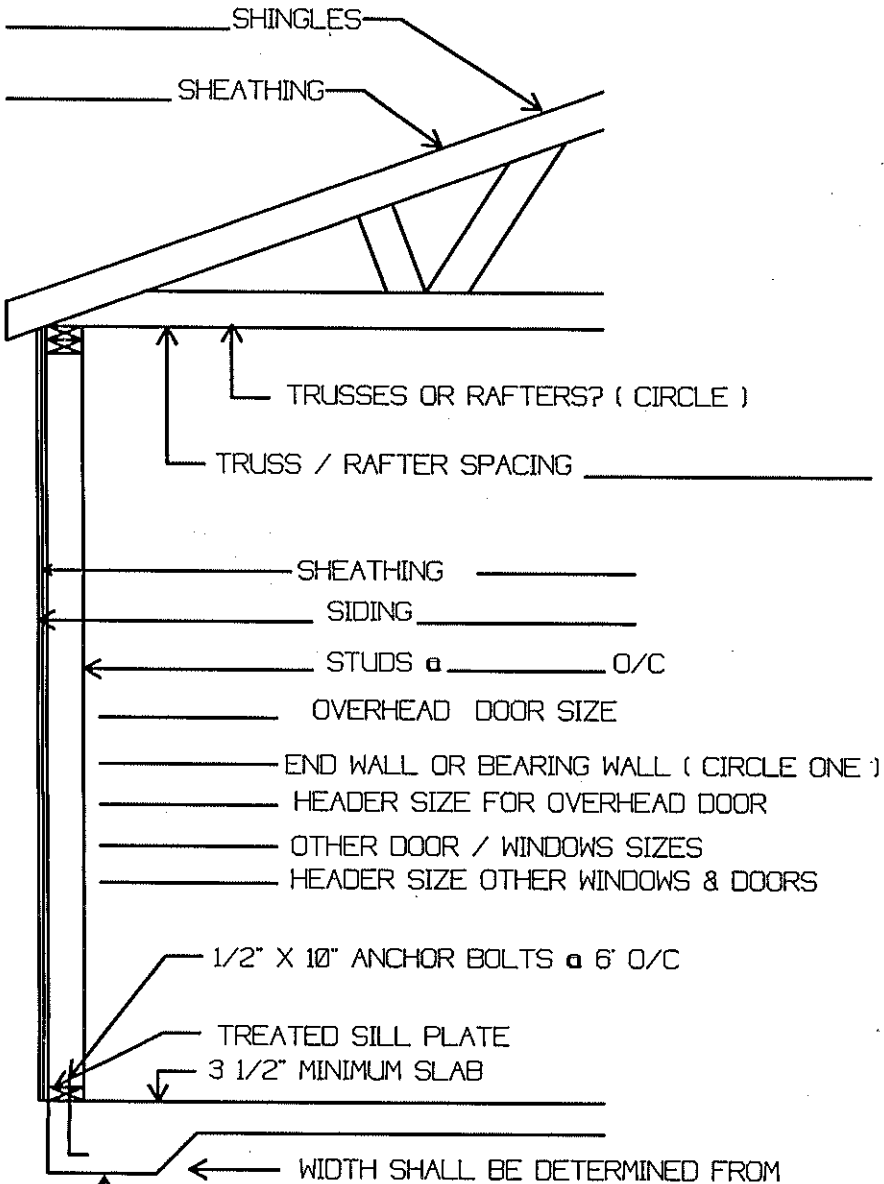

TABLE R403.1

	LOAD BEARING VALUE OF SOIL (PFS)				
	1500	2000	2500	3000	4000
1-STORY	12"	12"	12"	12"	12"
2-STORY	15"	12"	12"	12"	12"

GARAGE FLOOR PLAN

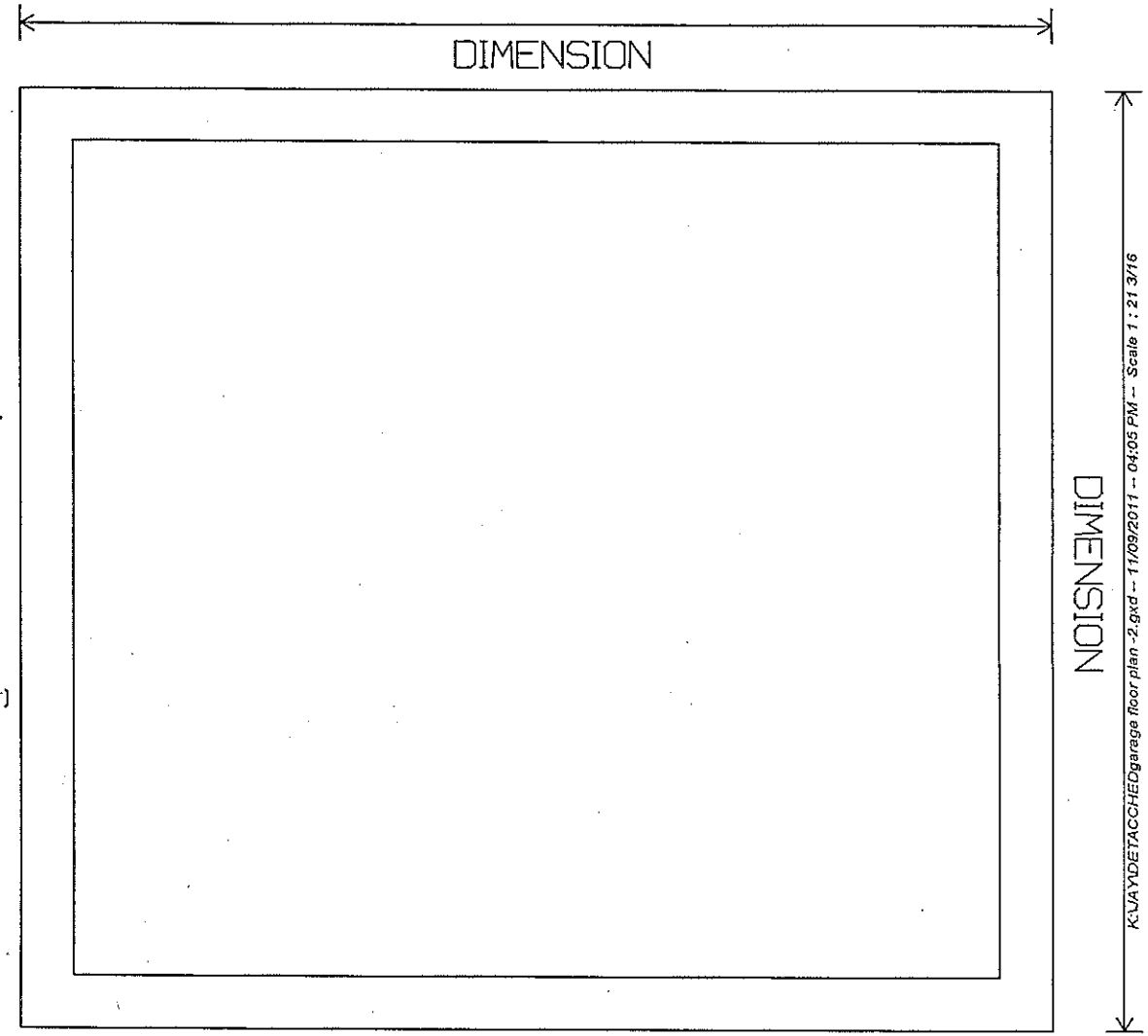

DRAW IN ALL WINDOW AND DOOR LOCATIONS
WITH SIZES AND HEADER SIZES

SHOW DIRECTION OF RAFTERS OR TRUSSES

SEE BACK FOR SAMPLE DRAWING

General building code requirements

The 2007 Minnesota State Building Code adopts the 2006 International Residential Code (2006 IRC). All "R" code references provided in this brochure pertain to the 2006 IRC.

a. Footings must extend to frost depth for all attached garages. A "floating slab" may be used for the foundation support of detached garages on all soils except peat and muck. The slab perimeter must be sized and/or reinforced to carry all design loads. The minimum-slab thickness must be 3½ inches and reinforcing is recommended. The minimum concrete strength required is 3500-pounds-per-square-inch for floating slab. Protect concrete from freezing until cured.

b. Anchor bolts or straps: Foundation plates must be anchored to the foundation with not less than ½ inch diameter steel bolts, or approved straps, embedded at least seven inches into the concrete and spaced not more than six feet apart. There must be a minimum of two bolts for each piece of sill plate with one bolt located within 12 inches of each end of each piece of sill plate. Anchor straps must be installed according to manufacturer's specifications.

c. Sill plate: All foundation sill plates must be approved pressure-preservative-treated wood, heartwood of redwood, black locust or cedar.

d. Wall framing: Studs must be placed with their wide dimension perpendicular to the wall and not less than three studs must be installed at each corner of an exterior wall. Minimum stud size is two inches by four inches and spaced not more than 24 inches on center.

The following samples show the minimum detail expected on site, floor and elevation plans to ensure the permit process proceeds smoothly. Additional information, such as sectional drawing or elevations, may be required. The plans should include the following information:

1. Proposed size of garage.
2. Location and size of door and window opening.
3. Size of headers over all doors and window openings.
4. Size, spacing and direction of rafter (roof) materials.
5. Type (grade and specie) of lumber to be used.
6. Braced wall panels per R602.10.

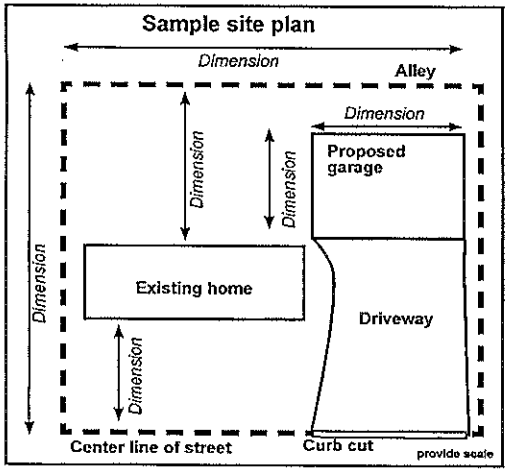

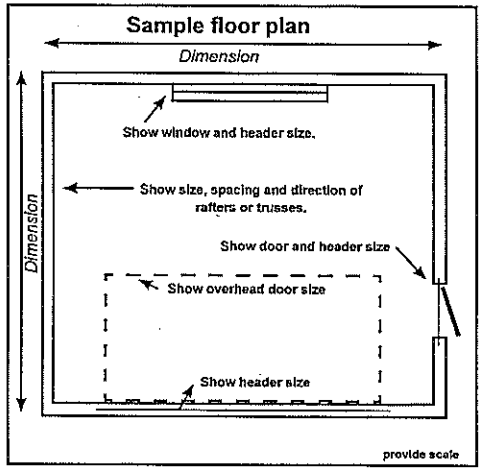

e. Top plate: Bearing and exterior wall studs need to be capped with double-top plates installed to provide overlapping at corners and at intersections with other partitions. End joints in double-top plates must be offset at least 24 inches.

f. Sheathing, roofing and siding: Approved wall sheathing, siding, roof sheathing and roof covering must be installed according to the manufacturer's specifications. Wall sheathing may be required to have a weather-resistive barrier installed over the product prior to application of the siding product.

g. Wood and earth separation: Wood used in construction located nearer than 6 inches to earth shall be treated wood.

h. Roof framing: Size and spacing of conventional lumber used for roof framing depends upon the roof pitch, span, the type of material being used and the loading characteristics being imposed. Garages must be designed for the appropriate snow load in your area. Contact your local building inspector. A snow load map is online at www.dli.mn.gov/ccld/pdf/bc_map_frost_depth.pdf.

Rafters need to be framed directly opposite each other at the ridge. A ridge board at least one inch (nominal) thickness and not less in depth than the cut end of the rafter is required for hand-framed roofs. At all valleys and hips, there also needs to be a single valley or hip rafter not less than two inches (nominal) thickness and not less in depth than the cut of the rafter. Valley needs to be designed as a beam.

Rafters must be nailed to the adjacent ceiling joist to form a continuous tie between exterior walls when the joists are parallel to the rafters. Where not parallel, rafters must be tied by a minimum one inch by four inch (nominal) cross tie spaced a maximum four foot on center. Manufactured trusses are to be installed per the manufacturer.

i. Separation required: An attached garage shall be separated from the residence and its attic area by not less than ½-inch (12.7 mm) gypsum board applied on the garage side. Where the separation is a floor-ceiling assembly, the structure supporting the separation shall be protected by not less than ⅝-inch (15.9 mm) type "X" gypsum board or equivalent.

j. Concrete curb block: Concrete masonry curb blocks shall be at least 6-inch-modular width (4-inch-curb blocks are not permitted by code).

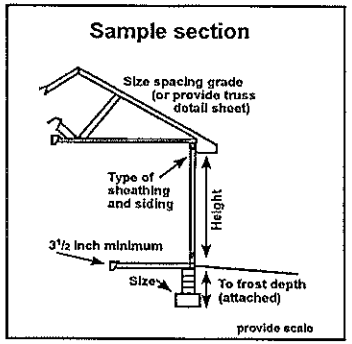

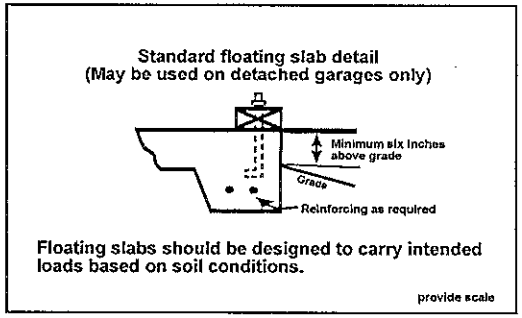

KASSON RE-INSPECTION FEES

The intent is to re-coop costs incurred for unnecessary re-inspections.

The contractor or owner will be given one (1) verbal warning. After the warning is issued, they will be put on a re-inspection list. Once on the list, each additional "did not pass" inspection will require a fee of $60.00 to be paid to the City of Kasson prior to scheduling a re-inspection.

When an inspection does not pass but can be re-inspected at the next required inspection, a re-inspection fee will not be required. Should the correction not be completed and an additional trip is required, a re-inspection fee would be required.

The inspector in the field will inform the office when an inspection did not pass. If it is determined a fee is due, the inspector will inform the contractor/owner. CMS will inform the City via fax when a re-inspection fee is due. When the fee is paid, the City will call CMS. CMS will then be allowed to re-schedule.

Exempt situation: When a final grade cannot be completed due to winter weather. A temporary Certificate of Occupancy will be issued. When CMS is notified the correction is complete, we would schedule when in Kasson to final out the project.